Ginlong Technologies Co., Ltd.
No. 57 Jintong Road, Binhai Industrial Park, Xiangshan, Ningbo,
Zhejiang, 315712, P.R.China.
Tel: +86 (0)574 6578 1806
Fax: +86 (0)574 6578 1606
Email:info@ginlong.com
Web:www.ginlong.com

Please adhere to the actual products in case of any discrepancies in this user manual.

If you encounter any problem on the inverter, please find out the inverter S/N and contact us, we will try to respond to your question ASAP.

Solis S5 Single Phase Inverter

(2.5-6)K Installation and Operation Manual

Ver 1.0

Ginlong Technologies Co., Ltd.

Contents

1. Introduction 2
   1.1 Product Description 2
   1.2 Packaging 3
2. Safety Instructions 4
   2.1 Safety Symbols 4
   2.2 General Safety Instructions 4
   2.3 Notice For Use 5
3. Overview 6
   3.1 Front Panel Display 6
   3.2 LED Status Indicator Lights 6
   3.3 Keypad 6
   3.4 LCD 6
4. Installation 7
   4.1 Select Location for the Inverter 7
   4.2 Mounting the Inverter 9
   4.3 Electrical Connections 11
5. Start & Stop 23
   5.1 Start the Inverter 23
   5.2 Stop the Inverter 23
6. Operation 24
   6.1 Main Menu 24
   6.2 Information 24
   6.3 Settings 26
   6.4 Advanced Info. 27
   6.5 Advanced Settings 30
   6.6 AFCI function 40
7. Maintenance 42
8. Troubleshooting 42
9. Specifications 45

1.1 Product Description

Solis S5 Single Phase Inverters integrate DRM and backflow power control function, that could suitable for smart grid requirement.
This manual covers the S5 Single Phase Inverter model listed below:
S5-GR1P2.5K, S5-GR1P3K, S5-GR1P3.6K, S5-GR1P4K, S5-GR1P4.6K, S5-GR1P5K, S5-GR1P6K

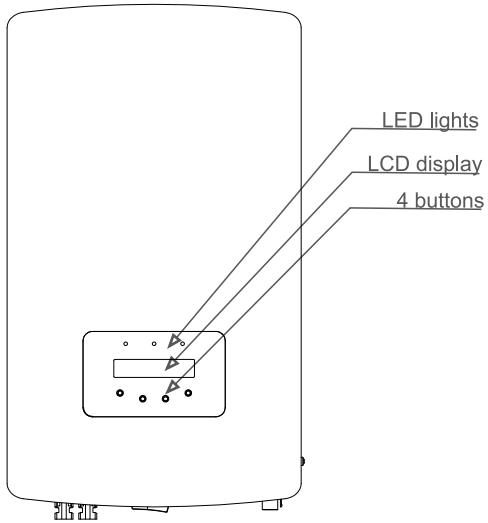

Figure 1.1 Front side view

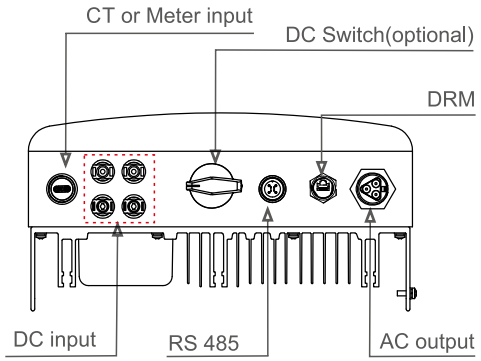

Figure 1.2 Bottom side view

1. Introduction

1.2 Packaging

When you receive the inverter, please ensure that all the parts listed below are included:

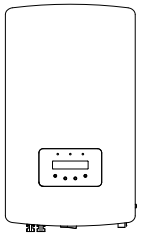
Inverter x1

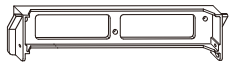
Back plate x1

Fastening screw x2

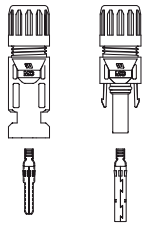
DC connector x4

AC connector x1

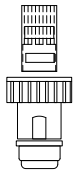
RJ45 connector x1

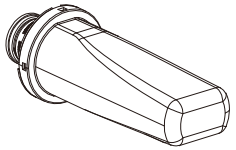
WiFi/GPRS Stickx1
(Optional)

User manual x1

If anything is missing, please contact your local Solis distributor.

Improper use may result in potential electric shock hazards or burns. This manual contains important instructions that should be followed during installation and maintenance. Please read these instructions carefully before use and keep them for future reference.

2.1 Safety Symbols

Safety symbols used in this manual, which highlight potential safety risks and important safety information, are listed as follows:

WARNING:
WARNING symbol indicates important safety instructions, which if not correctly followed, could result in serious injury or death.

NOTE:
NOTE symbol indicates important safety instructions, which if not correctly followed, could result in some damage or the destruction of the inverter.

CAUTION:
CAUTION, RISK OF ELECTRIC SHOCK symbol indicates important safety instructions, which if not correctly followed, could result in electric shock.

CAUTION:
CAUTION, HOT SURFACE symbol indicates safety instructions, which if not correctly followed, could result in burns.

2.2 General Safety Instructions

WARNING:
Only devices in compliance with SELV (EN 69050) may be connected to the RS485 and USB interfaces.

WARNING:
Please don't connect PV array positive(+) or negative(-) to ground, it could cause serious damage to the inverter.

WARNING:
Electrical installations must be done in accordance with the local and national electrical safety standards.

5min

WARNING:
Do not touch any inner live parts until 5 minutes after disconnection from the utility grid and the PV input.

CAUTION:
Risk of electric shock. Do not remove cover. There is no user serviceable parts inside. Refer servicing to qualified and accredited service technicians.

WARNING:
To reduce the risk of fire, over-current protective devices (OCPD) are required for circuits connected to the Inverter.
The DC OCPD shall be installed per local requirements. All photovoltaic source and output circuit conductors shall have disconnects that comply with the NEC Article 690, Part II. All Solis S5 Single Phase Inverters feature an integrated DC switch.

CAUTION:
The PV array (Solar panels) supplies a DC voltage when they are exposed to sunlight.

CAUTION:
Risk of electric shock from energy stored in capacitors of the Inverter.
Do not remove cover for 5 minutes after disconnecting all power sources (service technician only). Warranty may be voided if the cover is removed without unauthorized.

CAUTION:
The surface temperature of the inverter can exceed 75℃ (167F).
To avoid risk of burns, DO NOT touch the surface when inverter is operating.
The inverter must be installed out of reach of children.

PV module used with inverter must have an IEC 61730 Class A rating.

2.3 Notice For Use

The inverter has been constructed according to the applicable safety and technical guidelines. Use the inverter in installations that meet the following specifications only:

1.Permanent installation is required.

2.The electrical installation must meet all the applicable regulations and standards.

3.The inverter must be installed according to the instructions stated in this manual.

4.The inverter must be installed according to the correct technical specifications.

5.To startup the inverter, the Grid Supply Main Switch (AC) must be switched on, before the solar panel's DC isolator shall be switched on. To stop the inverter, the Grid Supply Main Switch (AC) must be switched off before the solar panel's DC isolator shall be switched off.

3. Overview

3.1 Front Panel Display

Figure 3.1 Front Panel Display

3.2 LED Status Indicator Lights

	Light	Status	Description
①	POWER	ON	The inverter can detect DC power.
		OFF	No DC power or low DC power.
②	OPERATION	ON	The inverter is operating properly.
		OFF	The inverter has stopped to supply power.
		FLASHING	The inverter is initializing.
③	ALARM	ON	Alarm or fault condition is detected.
		OFF	The inverter is operating without fault or alarm.

Table 3.1 Status Indicator Lights

3.3 Keypad

There are four keys in the front panel of the Inverter(from left to right): ESC, UP, DOWN and ENTER keys. The keypad is used for:

- Scrolling through the displayed options (the UP and DOWN keys);
- Access to modify the adjustable settings (the ESC and ENTER keys).

3.4 LCD

The two-line Liquid Crystal Display (LCD) is located on the front panel of the Inverter, which shows the following information:

- Inverter operation status and data;
- Service messages for operator;
- Alarm messages and fault indications.

4. Installation

4.1 Select a Location for the Inverter

To select a location for the inverter, the following criteria should be considered:

WARNING: Risk of fire

Despite careful construction, electrical devices can cause fires.

- Do not install the inverter in areas containing highly flammable materials or gases.
- Do not install the inverter in potentially explosive atmospheres.

- Do not install in small closed spaces where air can not circulate freely. To avoid overheating, always make sure the flow of air around the inverter is not blocked.
- Exposure to direct sunlight will increase the operational temperature of the inverter and may cause output power limiting. Recommends inverter installed to avoid direct sunlight or raining.
- To avoid over heating ambient air temperature must be considered when choosing the inverter installation location. Recommends using a sun shade minimizing direct sunlight when the ambient air temperature around the unit exceeds 104°F/40°C.

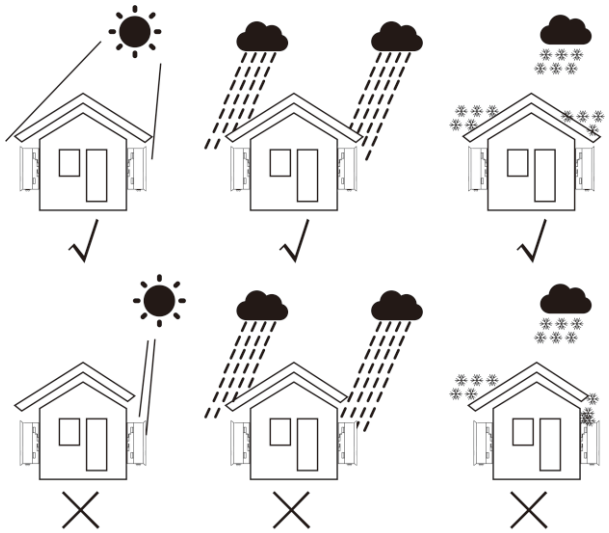

Figure 4.1 Recommended Installation locations

- Install on a wall or strong structure capable of bearing the weight.
- Install vertically with a maximum incline of +/- 5°.If the mounted inverter is tilted to an angle greater than the maximum noted, heat dissipation can be inhibited, and may result in less than expected output power.
- When 1 or more inverters are installed in one location, a minimum 12inchs clearance should be kept between each inverter or other object. The bottom of the inverter should be 20inchs clearance to the ground.

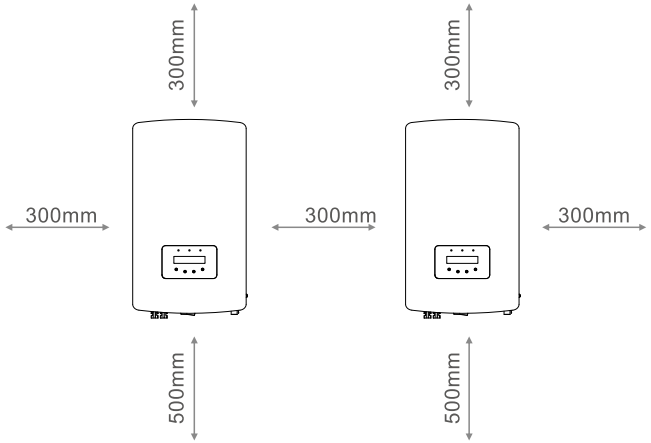

Figure 4.2 Inverter Mounting clearance

- Visibility of the LED status indicator lights and the LCD located at the front panel of the inverter should be considered.
- Adequate ventilation must be provided if the inverter is to be installed in a confined space.

NOTE:
Nothing should be stored on or placed against the inverter.

4.2 Mounting the Inverter

Dimensions of mounting bracket:

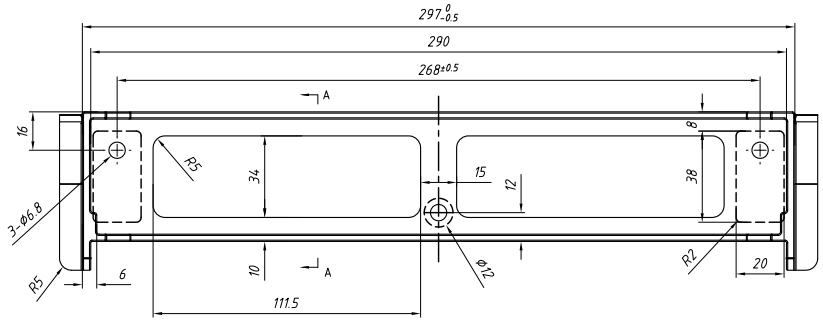

Figure 4.3 Inverter wall mounting

Please see Figure 4.4 and Figure 4.5 for instruction on mounting the inverter..
The inverter shall be mounted vertically. The steps to mount the inverter are listed below.

1. According to the figure 4.2, select the mounting height of the bracket and mark the mounting holes. For brick walls, the position of the holes should be suitable for the expansion bolts.

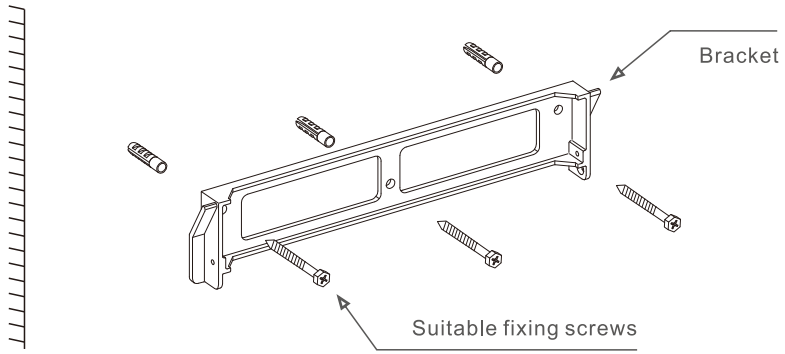

Figure 4.4 Inverter wall mounting

2. Make sure the bracket is horizontal. And the mounting holes (in Figure 4.4) are marked correctly. Drill the holes into wall at your marks.
3. Use the suitable expansion screws to fix the bracket on the wall.

WARNING:
The inverter must be mounted vertically.

4. Lift up the inverter (be careful to avoid body strain), and align the back bracket on the inverter with the convex section of the mounting bracket. Hang the inverter on the mounting bracket and make sure the inverter is secure (see Figure 4.5).

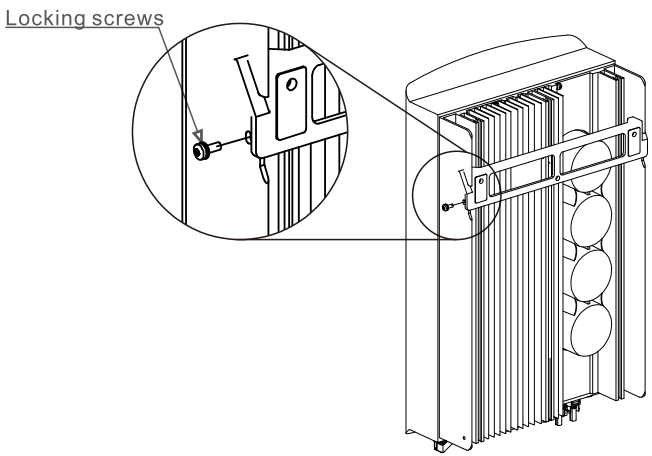

Figure 4.5 Wall Mount Bracket

5. Use M4*9 screws in accessory to lock the inverter to the mount bracket.

4.3 Electrical Connections

Inverter designs quick-connect terminal, so top cover needn't open during electrical connection. The sign meaning located the bottom of inverter, as shown below in table 4.1. All electrical connections are suit for the local or national standard.

+	Positive DC input terminal
–	Negative DC input terminal
DC 1	DC input terminal
DC 2	DC input terminal
DC SWITCH	Switch of DC input terminals
COM	RJ45 and terminal block for RS485 communication port
GRID	Connecting terminal of the Grid

Table 4.1 Electrical connection symbols

4.3.1 Connect PV side of inverter

The electrical connection of the inverter must follow the steps listed below:

1. Switch the Grid Supply Main Switch (AC) OFF.
2. Switch the DC Isolator OFF.
3. Assemble PV input connector to the Inverter.

Before connecting inverter, please make sure the PV array open circuit voltage is within the limit of the inverter.

Maximum 550Voc for

S5-GR1P2.5K

Maximum 600Voc for

S5-GR1P3K, S5-GR1P3.6K, S5-GR1P4K,
S5-GR1P4.6K, S5-GR1P5K, S5-GR1P6K

Before connection, please make sure the polarity of the output voltage of PV array matches the “DC+” and “DC-” symbols.

Please don’t connect PV array positive or negative pole to the ground, it could cause serious damages to the inverter.

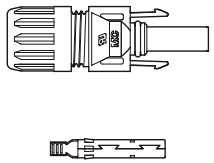

Figure 4.6 DC+ Connector

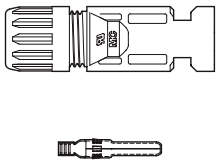

Figure 4.7 DC- Connector

Please use approved DC cable for PV system.

Cable type	Cross section（mm²）	
	Range	Recommended value
Industry generic PV cable (model:PV1-F)	4.0~6.0 (12~10AWG)	4.0（12AWG）

The steps to assemble the DC connectors are listed as follows:

1. Strip off the DC wire for about 7mm, Disassemble the connector cap nut. (see Figure 4.8)
2. Insert the wire into the connector cap nut and contact pin. (see Figure 4.9)
3. Crimp the contact pin to the wire using a proper wire crimper. (see Figure 4.10)
4. Insert the contact pin to the top part of the connector and screw up the cap nut to the top part of the connector .(see figure 4.11).
5. Then connect the DC connectors to the inverter. Small click will confirm connection. (see figure 4.12)

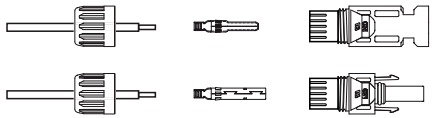

Figure 4.8 Disassemble the Connector Cap nut

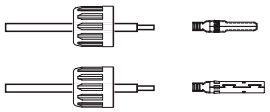

Figure 4.9 Insert the Wire into the Connector Cap nut and contact pin

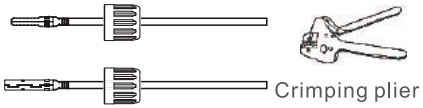

Figure 4.10 Crimp the contact pin to the wire

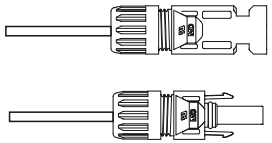

Figure 4.11 Connector with Cap nut Screwed on

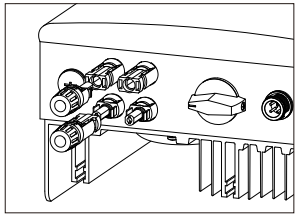

Figure 4.12 Connect the DC Connectors to the Inverter

Caution:

If DC inputs are accidently reversely connected or inverter is faulty or not working properly, it is NOT allowed to turn off the DC switch as it will damage the inverter and even leads to a fire disaster.

The correct actions are:

*Use a clip-on ammeter to measure the DC string current.

*If it is above 0.5A, please wait for the solar irradiance reduces until the current decreases to below 0.5A.

*Only after the current is below 0.5A, you are allowed to turn off the DC switches and disconnect the PV strings.

Please note that any damages due to wrong operations are not covered in the device warranty.

4.3.2 Connect grid side of inverter

For all AC connections, 2.5- 6mm^2 105 ℃ cable is required to be used. Please make sure the resistance of cable is lower than 1 ohm. If the wire is longer than 20m, it's recommended to use 6mm^2 cable.

There are "L" "N" "⏚ "symbols marked inside the connector , the Line wire of grid must be connected to“L”terminal; the Neutral wireof grid must be connected to "N" terminal; the Earth of grid must be connected to "⏚" (see Figure 4.13).

Cable type	Cross section（mm²）	
	Range	Recommended value
Industry generic PV cable	2.5~6.0	6.0

Table 4.2 Grid cable size

Figure 4.13 AC Grid Terminal Connector Inside

Each Solis S5 Single Phase Inverter is supplied with an AC grid terminal connector.

Figure 4.14 AC Grid Terminal Connector

4. Installation

The steps to assemble the AC grid terminal connectors are listed as follows:

a) Disassemble the AC connector. Strip the AC wires about 6mm.

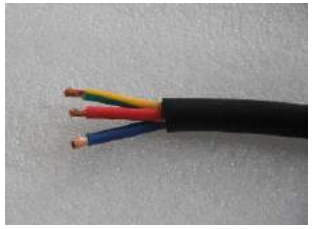

Figure 4.15 Stripped AC Wires

b) Fix the green and yellow wire to the ground terminal. Fix the red(or brown) wire to L (line) terminal. Fix the blue wire to N(Neutral). Tight the screws on the connector. Please try to pull out the wire to make sure the it’s well connected.

Figure 4.16 Connect Wires to the Terminal

c) Tighten up the cap on the terminal (see Figure 4.17).

Figure 4.17 Tighten up the Cap on the Terminal

d) Connect the AC grid terminal connector to the inverter. Small click will confirm connection.

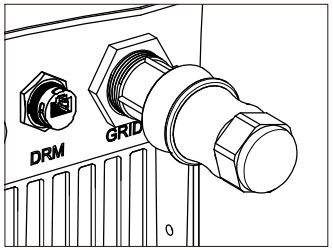

Figure 4.18 Connect the AC Connector to the Inverter

Note: Connection for Split phase grid.
When connect to 208/220/240V split phase, please connect L1 to “L” terminal, L2 to “N” terminal. Also connect earth to ground terminal.

4.3.3 External ground connection

An external ground connection is provided at the right side of inverter.

Prepare OT terminals: M4. Use proper tooling to crimp the lug to the terminal.

Connect the OT terminal with ground cable to the right side of inverter. The torque is 20 in-lbs (2Nm).

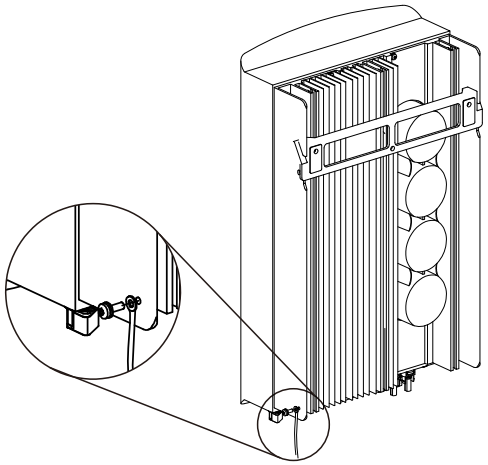

Figure4. 19 Connect the external grounding conductor

4.3.4 Max. over current protection device (OCPD)

To protect the inverter's AC grid connection conductors, Solis recommends installing breakers that will protect against overcurrent. The following table defines OCPD ratings for the Solis S5 Single Phase Inverters.

Inverter	Rated output voltage(V)	Rated output current (A)	Current for protection device (A)
S5-GR1P2.5K	220/230	11.4/10.9	15
S5-GR1P3K	220/230	13.6/13	20
S5-GR1P3.6K	220/230	16/15.7	20
S5-GR1P4K	220/230	18.2/17.4	25
S5-GR1P4.6K	220/230	20.9/20	30
S5-GR1P5K	220/230	22.7/21.7	30
S5-GR1P6K	220/230	27.3	40

Table 4.3 Rating of grid OCPD

4.3.5 Inverter monitoring connection

The inverter can be monitored via Wi-Fi or GPRS. All Solis communication devices are optional (Figure 4.20). For connection instructions, please refer to the Solis Monitoring Device installation manuals.

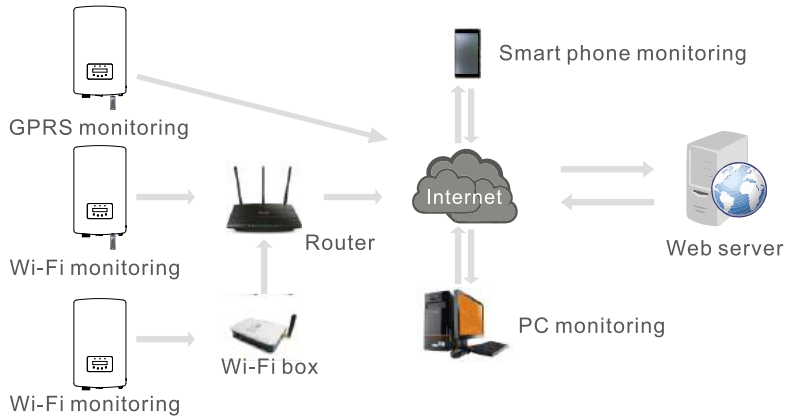

Figure 4.20 Wi-Fi or GPRS communication function

4.3.6 Meter Connection(optional)

Refer to figure 4.21, which is a simple guidance for installing a solar system with PV inverter. A DC isolator is required to be installed in the system between PV panels with inverter.

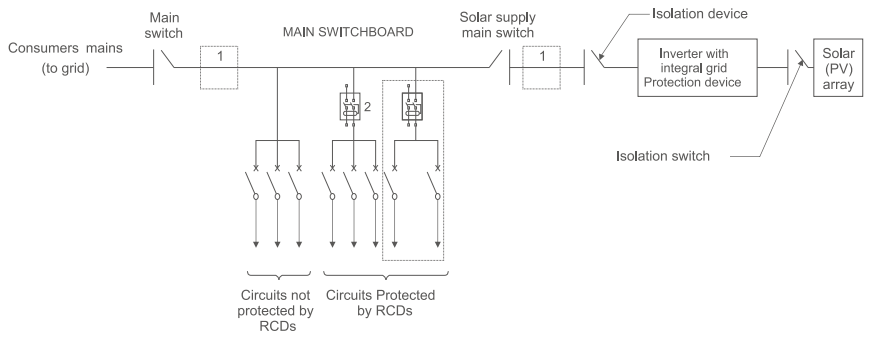

Figure 4.21 Guidance for a Simple Installation of an Inverter Solar Energy System

1. The RCD should be in parallel connection between the consumers mains and the solar supply.
2. More than one RCD may be used. Each RCD can protect one or more circuits.

4.3.7 Meter Connection(optional)

The inverter can work with a single phase smart meter to achieve Export Power Management function and/or 24hour consumption monitoring function.

NOTE

Inverters are classified as "Meter Model" and "CT Model" due to hardware difference.
Meter Model can only connect a smart meter.
CT Model can only connect a smart sensor.
Please consult Solis Sales Rep before placing the order.

NOTE

To achieve Export Power Management function, the smart meter can be installed on either grid side or load side. To achieve 24hour consumption monitoring function, the smart meter can only be installed on grid side.

Two types of meters are supported:
Direct Insert Type Meter - Max input current 60A (Model:DDSD1352-C)
External CT Type Meter - 120A/40mA CT is supplied (Model: ACR10RD16TE)
Customer can place the order for a suitable meter from Solis Sales Reps.
Below are the connection diagrams of different meters connecting to different locations.
Detailed settings please refer to Section 6.5.12.

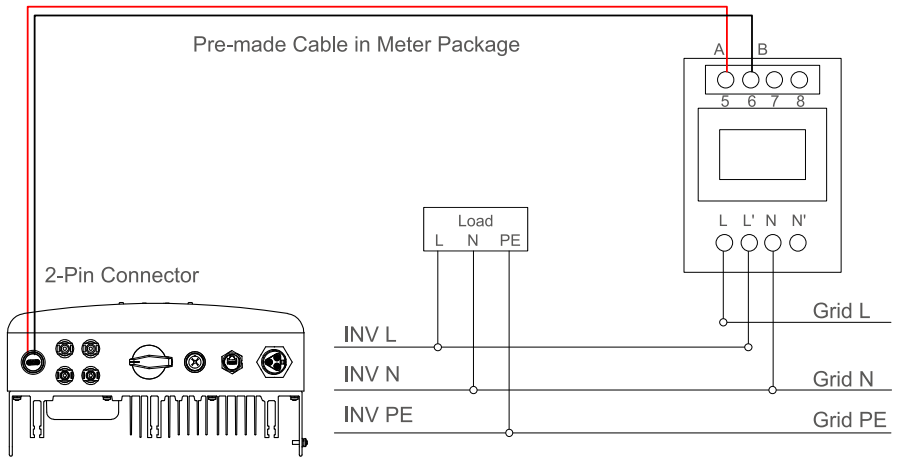

Figure 4.22 Direct Insert Type Meter - “Meter in Grid”

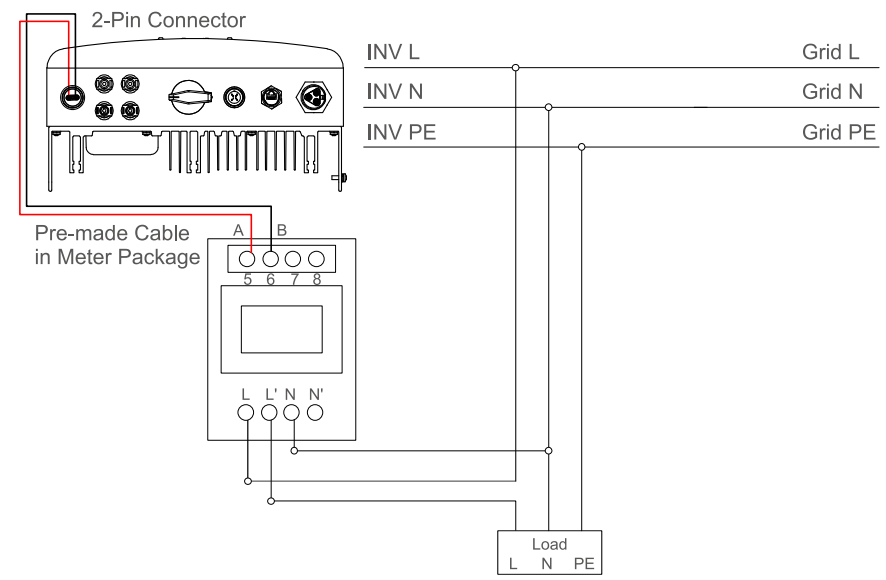

Figure 4.23 Direct Insert Type Meter - “Meter in Load”

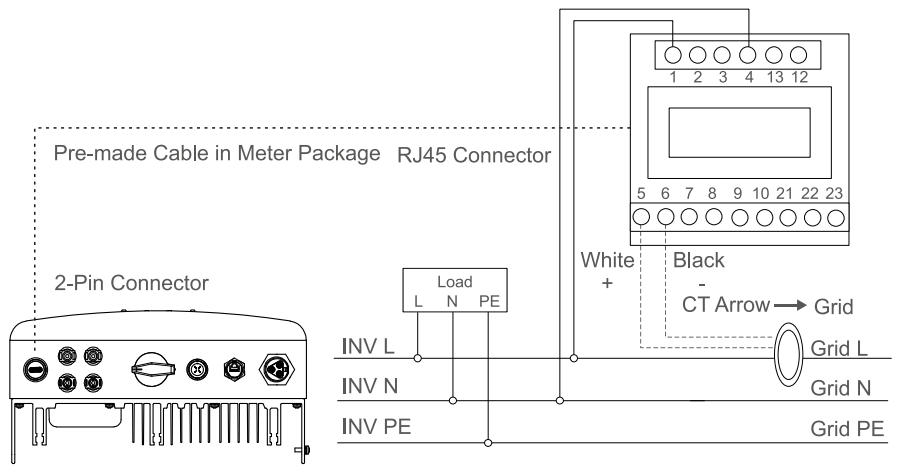

Figure 4.24 External CT Type Meter - “Meter in Grid”

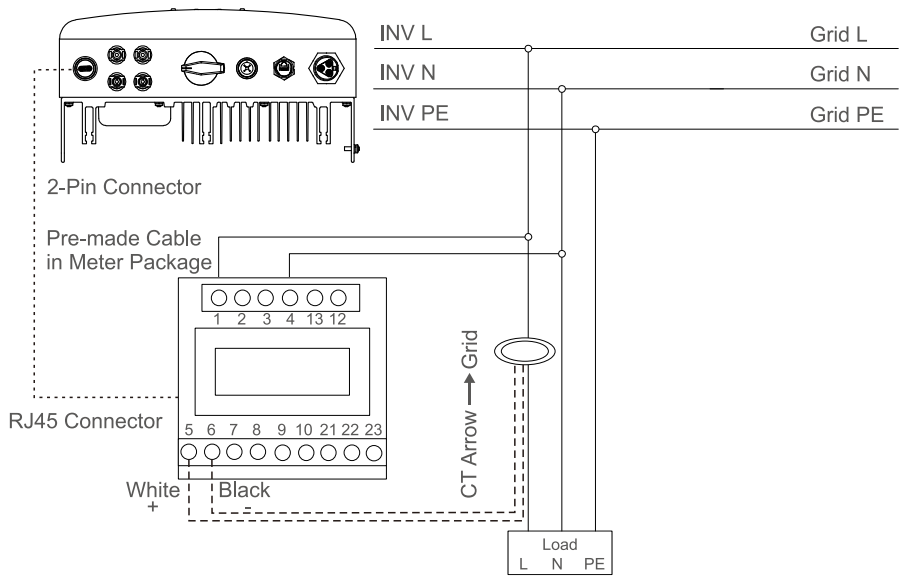

Figure 4.25 External CT Type Meter - “Meter in Load”

4.3.8 CT connections(optional)

The inverter can work with a smart sensor to achieve Export Power Management function.

NOTE

Inverters are classified as "Meter Model" and "CT Model" due to hardware difference.
Meter Model can only connect a smart meter.
CT Model can only connect a smart sensor.
Please consult Solis Sales Rep before placing the order.

NOTE

To achieve Export Power Management function, the smart sensor must be installed on the grid side.

Below is the connection diagram of the smart sensor.
Detailed settings please refer to Section 6.5.12.

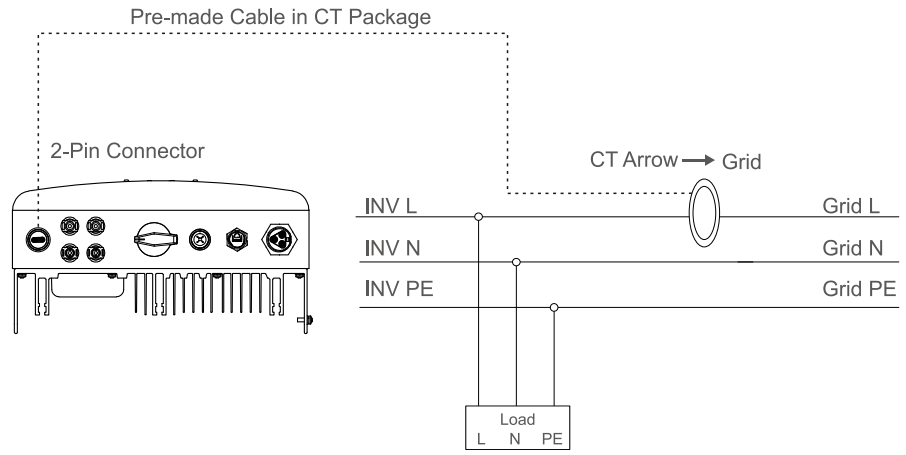

Figure 4.26 Smart Sensor

4.3.9 Logic interface connection

Logic interface is required by some local regulations that can be operated by a simple switch or contactor. When the switch is closed the inverter can operated normally. When the switch is opened, the inverter will reduce it's output power to zero within 5s.
Pin5 and Pin6 of RJ45 terminal is used for the logic interface connection.

Please follow below steps to assemble RJ45 connector.

1.Insert the network cable into the communication connection terminal of RJ45.

Figure 4.27 RJ45 communication connection terminals

2.Use the network wire stripper to strip the insulation layer of the communication cable. According to the standard line sequence of figure 4.28 connect the wire to the plug of RJ45, and then use a network cable crimping tool to make it tight.

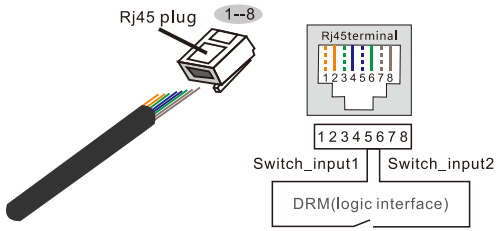

Correspondence between the cables and the stitches of plug, Pin5 and Pin6 of RJ45 terminal is used for the logic interface, other Pins are reserved.
Pin 1: Reserved; Pin 2: Reserved
Pin 3: Reserved; Pin 4: Reserved
Pin 5: Switch_input1; Pin 6: Switch_input2
Pin 7: Reserved; Pin 8: Reserved

Figure 4.28 Strip the insulation layer and connect to RJ45 plug

3.Connect RJ45 to DRM (logic interface) .

After wire connection, please refer chapter 6.5.8.1 to enable the logic interface function.

5.1 Start the Inverter

To start up the Inverter, it is important that the following steps are strictly followed:

1. Switch the grid supply main Switch (AC) ON first.
2. Switch the DC switch ON. If the voltage of PV arrays are higher than start up voltage, the inverter will turn on. The red LED power will light.
3. When both the DC and the AC sides supply to the inverter, it will be ready to generate power. Initially, the inverter will check both its internal parameters and the parameters of the AC grid, to ensure that they are within the acceptable limits. At the same time, the green LED will flash and the LCD displays the information of INITIALIZING.
4. After 30-300 seconds (depending on local requirement), the inverter will start to generate power. The green LED will be on continually and the LCD displays GENERATING.

WARNING:
Do not touch the surface when the inverter is operating. It may be hot and cause burns.

5.1.1 Inverter working status

When inverter working normally,there would be 5 status :

Generating:Inverter is working normally
LimByTemp: Inverter power limited by over ambient temperature.
LimByFreq: Inverter power limited by over grid frequency
LimByVg: Inverter power limited by over grid voltage
LimByVar: Inverter power limited by generating reactive power.

5.2 Stop the Inverter

To stop the Inverter, the following steps must be strictly followed:

1. Switch the Supply Main Switch (AC) OFF.
2. Wait 30 seconds. Switch the DC Switch OFF.
   All the LEDs of the inverter will be off in one minute.

During normal operation, the display alternately shows the power and the operation status with each screen lasting for 10 seconds (see Figure 6.1). Screens can also be scrolled manually by pressing the UP and DOWN keys. Press the ENTER key to access to the Main Menu.

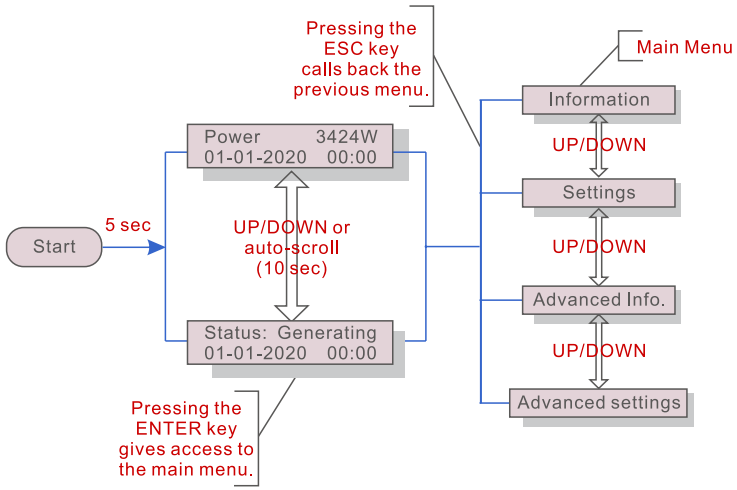

Figure 6.1 Operation Overview

6.1 Main Menu

There are four submenus in the Main Menu (see Figure 6.1):

1. Information
2. Settings
3. Advanced Info.
4. Advanced Settings

6.2 Information

The Solis S5 Single Phase Inverter main menu provides access to operational data and information. The information is displayed by selecting "Information" from the menu and then by scrolling up or down.

6. Operation

Display	Duration	Description
V_DC1 350.8V I_DC1 5.1A	10 sec	V_DC1: Shows input 01 voltage value. I_DC1: Shows input 01 current value.
V_DC2 350.8V I_DC2 5.1A	10 sec	V_DC2: Shows input 02 voltage value. I_DC2: Shows input 02 current value.
V_Grid 230.4V I_Grid 8.1A	10 sec	V_Grid: Shows the grid's voltage value I_Grid: Shows the grid's current value.
Status: Generating Power: 1488W	10 sec	Status: Shows instant status of the Inverter. Power: Shows instant output power value.
Grid Frequency F_Grid 60.06Hz	10 sec	F_Grid: Shows the grid's frequency value.
Total Energy 0258458 kwh	10 sec	Total generated energy value.
This Month: 0123kwh Last Month: 0123kwh	10 sec	This Month: Total energy generated this month. Last Month: Total energy generated last month.
Today: 15.1kwh Yesterday: 13.5kwh	10 sec	Today: Total energy generated today. Yesterday: Total energy generated yesterday.
Inverter SN 00000000000000	10 sec	Display series number of the inverter.
Export_P: +0000W Export_I: 00.0A	10 sec	Power of ERM. Current of EPM.
Work Mode: NULL DRM Number: 08	10 sec	Work Mode: The work mode of inverter. DRM Number: Show the number 01-08.
Meter EnergyP 0000000. 00kWh	10 sec	Meter EnergyP: The active power.

Table 6.1 Information list

6.2.1 Lock screen

Pressing the ESC key returns to the Main Menu. Pressing the ENTER key locks (Figure 6.2(a)) or unlocks (Figure 6.2 (b)) the screen.

Figure 6.2 Locks and Unlocks the Screen of LCD

6.3 Settings

The following submenus are displayed when the Settings menu is selected:

1.Set Time

2.Set Address

6.3.1 Set Time

This function allows time and date setting. When this function is selected, the LCD will display a screen as shown in Figure 6.3.

```
NEXT=<ENT>  OK=<ESC>
01-01-2020  00:00
```

Figure 6.3 Set Time

Press the UP/DOWN keys to set time and data. Press the ENTER key to move from one digit to the next (from left to right). Press the ESC key to save the settings and return to the previous menu.

6.3.2 Set Address

This function is used to set the address when muti inverters are connected to single monitor.
The address number can be assigned from “01”to “99”.
The default address number of Solis S5 Single Phase Inverter is “01”.

```
YES=<ENT>  NO=<ESC>
Set Address: 01
```

Figure 6.4 Set Address

Press the UP/DOWN keys to set the address. Press the ENTER key to save the settings. Press the ESC key to cancel the change and return to the previous menu.

6. Operation

6.4 Advanced Info - Technicians Only

NOTE:
To access to this area is for fully qualified and accredited technicians only.
Enter menu “Advanced Info.” and “Advanced settings” (need password).

Select “Advanced Info.” from the Main Menu. The screen will require the password as below:

```
YES=<ENT> NO=<ESC>
Password:0000
```

Figure 6.5 Enter password

The default password is “0010".
Please press “down” to move the cursor, press “up” to select the number.

After enter the correct password the Main Menu will display a screen and be able to access to the following information.

1.Alarm Message 2. Running message 3.Version 4. Daily Energy 5. Monthly Energy 6. Yearly Energy 7. Daily Record 8.Communication Data 9.Warning Message

The screen can be scrolled manually by pressing the UP/DOWN keys. Pressing the ENTER key gives access to a submenu. Press the ESC key to return to the Main Menu.

6.4.1 Alarm Message

The display shows the 100 latest alarm messages (see Figure 6.6). Screens can be scrolled manually by pressing the UP/ DOWN keys. Press the ESC key to return to the previous menu.

```
Alarm001: OV-G-V
Time: 00-00 Data: 7171
```

Figure 6.6 Alarm Message

6.4.2 Running Message

This function is for maintaince person to get running message such as internal temperature, Standard No.etc.
Screens can be scrolled manually by pressing the UP/DOWN keys.

6.4.3 Version

The screen shows the model version and the software version of the Inverter

Model: 08
Software Version: D20001

Figure 6.7 Model Version and Software Version

6.4.4 Daily Energy

The function is for checking the energy generation for selected day.

YES=<ENT> NO=<ESC>
Select: 2020-01-01

Figure 6.8 Select date for daily energy

Press DOWN key to move the cursor to day, month and year, press UP key to change the digit. Press Enter after the date is fixed.

2020-01-01: 051.3kWh
2020-01-01: 061.5kWh

Figure 6.9 Daily energy

Press UP/DOWN key to move one date from another.

6.4.5 Monthly Energy

The function is for checking the energy generation for selected month.

YES=<ENT> NO=<ESC>
Select: 2020-01

Figure 6.10 Select month for monthly energy

Press DOWN key to move the cursor to day and month, press UP key to change the digit. Press Enter after the date is fixed.

6. Operation

2020-02: 0510kWh
2020-01: 0610kWh

Figure 6.11 Month energy

Press UP/DOWN key to move one date from another.

6.4.6 Yearly Energy

The function is for checking the energy generation for selected year.

YES=<ENT> NO=<ESC>
Select: 2020

Figure 6.12 Select year for yearly energy

Press DOWN key to move the cursor to day and year, press UP key to change the digit. Press Enter after the date is fixed.

2020: 0017513kWh
2019: 0165879kWh

Figure 6.13 Yearly energy

Press UP/DOWN key to move one date from another.

6.4.7 Daily record

The screen shows history of changing settings. Only for maintance personel.

6.4.8 Communication Data

The screen shows the internal data of the Inverter (see Figure 6.14), which is for service technicians only.

01-05: 01 25 E4 9D AA
06-10: C2 B5 E4 9D 55

Figure 6.14 Communication Data

6.4.9 Warning Message

The display shows the 100 latest warn messages (see Figure 6.15). Screens can be scrolled manually by pressing the UP/ DOWN keys. Press the ESC key to return to the previous menu.

```
Msg000:
T: 00-00 00:00 D:0000
```

Figure 6.15 Warning Message

6.5 Advanced Settings - Technicians Only

NOTE:
To access to this area is for fully qualified and accredited technicians only. Please follow 6.4 to enter password to access this menu.

Select Advanced Settings from the Main Menu to access the following options:

1. Select Standard 2. Grid ON/OFF 3. 24H Switch 4. Clear Energy 5. Reset Password
6. Power Control 7. Calibrate Energy 8. Special Settings 9. STD. Mode Settings
10. Restore Settings 11. HMI Update 12. Internal EPM Set 13. External EPM Set
14. Restart HMI 15. Debug Parameter 16. DSP Update 17. Power Parameter

6.5.1 Selecting Standard

This function is used to select the grid's reference standard (see Figure 6.16).

```
YES=<ENT> NO=<ESC>
Standard:AS4777-02
```

Figure 6.16

Press the UP/DOWN keys to select the standard (AS4777-02,AS4777-15, VDE4105, VDE0126, UL-240V-A, UL-208V-A, UL-240V, UL-208V, MEX-CFE, G83/2 (for 1-3.6kW models), G59/3 (for 4-5kW models), C10/11, EN50438 DK, EN50438 IE, EN50438 NL and “User-Def” function)..

NOTE:
This function is for technicians use only.

NOTE:
For different countries, the grid standard needs to be set as different according to local requirements. If there is any doubt, please consult Solis service technicians for details.

6. Operation

Selecting the “User-Def” menu will access to the following submenu (see Figure 6.17),

```
— OV-G-V1: 260V
  OV-G-V1-T: 1S
```

Figure 6.17

NOTE:
The " User-Def" function can be only used by the service engineer and must be allowed by the local energy supplier.

Below is the setting range for “User-Def”.
Using this function, the limits can be changed manually.

OV-G-V1: 240---270V	OV-G-F1: 50.2-53Hz(60.2-64Hz)
OV-G-V1-T: 0.1---9S	OV-G-F1-T: 0.1---9S
OV-G-V2: 240---300V	OV-G-F2: 50.2-53Hz(60.2-64Hz)
OV-G-V2-T: 0.1---1S	OV-G-F2-T: 0.1---9S
UN-G-V1: 170---210V	UN-G-F1: 47-49.5Hz(56-59.8Hz)
UN-G-V1-T: 0.1---9S	UN-G-F1-T: 0.1---9S
UN-G-V2: 110---210V	UN-G-F2: 47-49Hz(56-59.8Hz)
UN-G-V2-T: 0.1---1S	UN-G-F2-T: 0.1---9S
Startup-T : 10-600S	Restore-T: 10-600S

6.5.2 Grid ON/OFF

This function is used to start up or stop the power generation of Solis Single Phase Inverter.

```
— Grid ON
  Grid OFF
```

Figure 6.18 Set Grid ON/OFF

Screens can be scrolled manually by pressing the UP/DOWN keys. Press the ENTER key to save the setting. Press the ESC key to return to the previous menu.

6.5.3 24H Switch

This function controls the 24H hours consumption function enable or disable.

```
—Enable
 Disable
```

Figure 6.19 Set 24H ON/OFF

NOTE:
When this is enabled, the inverter LCD will still be alive at night with the power LED light on. If the grid is in malfunction at night, the system can't recover even after the grid is back to normal but the consumption data will still be recorded in the meter. Until the sunrise, the system will start to work again while the meter data can be uploaded to the Solis monitoring system to calibrate the load consumption data.

6.5.4 Clear Energy

Clear Energy can reset the history yield of inverter

These two functions are applicable by maintenance personnel only, wrong operation will prevent the inverter from working properly.

6.5.5 Reset Password

This function is used to set the new password for menu "Advanced info." and "Advanced information" (see Figure 6.20).

```
YES=<ENT> NO=<ESC>
Password: 0000
```

Figure 6.20 Set new password

Enter the right password before set new password. Press the DOWN key to move the cursor, Press the UP key to revise the value. Press the ENTER key to execute the setting. Press the ESC key to return to the previous menu.

6. Operation

6.5.6 Power control

Active and reactive power can be set through power setting button.
There are 5 item for this sub menu:

1. Set output power 2. Set Reactive Power 3. Out_P With Restore
4. Rea_P With Restore 5. Select PF Curve

This function is applicable by maintenance personnel only, wrong operation will prevent the inverter from reaching maximum power.

6.5.7 Calibrate Energy

Maintenance or replacement could clear or cause a different value of total energy. Use this function could allow user to revise the value of total energy to the same value as before. If the monitoring website is used the data will be synchronous with this setting automatically.

```
YES=<ENT> NO=<ESC>
Energy:0000000kWh
```

Figure 6.21 Calibrate energy

Press the DOWN key to move the cursor, Press the UP key to revise the value. Press the ENTER key to execute the setting. Press the ESC key to return to the previous menu.

6.5.8 Special Settings

This function is applicable by maintenance personnel only, wrong operation will prevent the inverter from working properly.

6.5.9 STD Mode settings

There are 5 setting under STD. Mode settings.

1. Working mode 2. Power Rate limit 3. Freq. Derate set 4. 10mins OV-G-V set.
5. Initial Settings

This function is applicable by maintenance personnel only, wrong operation will prevent the inverter from working properly.

6.5.9.1 Enable logic interface settings

Please follow below settings to enable the **DRM.** DRM default setting is “OFF” , if DRM set “ON”, but the logic interface un-connected to the switch or the switch is open, the inverter HMI will display “Limit by DRM” and the inverter output power will be limited to zero.

1. Select **Initial Settings**
2. Select **DRM** and set it “ON”

6.5.10 Restore Settings

Restore setting could set all item in 6.5.8 special setting to default.
The screen shows as below:

```
Are you sure?
YES=<ENT> NO=<ESC>
```

Figure 6.22 Restore Settings

Press the Enter key to save the setting after setting grid off.
Press the ESC key to return the previous mean.

6.5.11 HMI Update

This function is used for updating the LCD program.

This function is applicable by maintenance personnel only, wrong operation will prevent the inverter from reaching maximum power.

6. Operation

6.5.12 Internal EPM Set

NOTE:
This section includes two functions related to the smart meter or smart sensor.
Please refer to section 4.3.7 or 4.3.8 for detailed connection diagrams.

Function 1: Internal Export Power Management Function

Inverters can work with a smart meter OR a smart sensor to dynamically limit the export power of the system. Zero injection can be achieved.
Smart meter can be installed either on the grid side OR the load side.
Smart sensor can only be installed on the grid side.

Function 2: 24 Hour Consumption Monitoring Function

Only applicable if Solis monitoring system is used.
Inverters can work with a smart meter to monitor the load consumption data for the whole day and the data will be displayed on the Solis monitoring system.
Smart meter can only be installed on the grid side.

NOTE:
Please refer to below instructions for different user scenarios.

Scenario 1. Only Function 1 is required

Using a Smart Meter:
Step 1: Refer to Section 4.3.7 to connect the smart meter on the grid side or load side.
Step 2: Select the corresponding meter model in Section 6.5.12.4
Step 3: Select the Section 6.5.12.1 Mode Select as Option 2(Meter in Load) or Option 3 (Meter in Grid) accordingly.
Step 4: Configure the Section 6.5.12.2 to set the allowed backflow power.
Step 5: Configure the Section 6.5.12.3 to enable the failsafe function (If necessary).

Using a Smart Sensor:
Step 1: Refer to Section 4.3.8 to connect the smart sensor on the grid side.
Step 2: Select the Section 6.5.12.1 Mode Select as Option 5(Current Sensor).
Step 3: Configure the "CT Sampling Ratio" and "CT Link Test" if necessary.
Step 4: Configure the Section 6.5.12.2 to set the allowed backflow power.
Step 5: Configure the Section 6.5.12.3 to enable the failsafe function (If necessary).

Scenario 2. Both Function 1 and 2 are required

Using a Smart Meter:

Step 1: Refer to Section 4.3.7 to connect the smart meter on the grid side.

Step 2: Select the corresponding meter model in Section 6.5.12.4

Step 3: Select the Section 6.5.11.1 Mode Select as Option 3(Meter in Grid).

Step 4: Select the Section 6.5.3 24H Switch as "Enable".

Step 5: Configure the Section 6.5.11.2 to set the allowed backflow power.

Step 6: Configure the Section 6.5.11.3 to enable the failsafe function (If necessary).

Step 7: Configure the Solis monitoring system (Please refer to the manual of monitoring device)

If customer does not want to enable the export power control function, please change the "backflow power" to the max output power of the inverter in Step 5 OR simply select the mode as "consumption monitor" in Step 3 and skip Step 5-6.

Select EPM Settings from the Main Menu to access the following options:

1. Mode Select 2. Set Backflow Power 3. Fail safe ON/OFF 4. Meter Select

6.5.12.1 Mode Select

There are 5 settings in this menu as below:

1. EPM OFF 2. Meter in Load 3. Meter in Grid 4.Consumption Monitor 5. Current sensor

EPM OFF: Functions are disabled

Meter in Load: Solis Smart Meter is connected in the load branch circuit.

Meter in Grid: Solis Smart Meter is connected in the grid connection point (The backflow power is default as 0W).

Consumption Monitor: Solis Smart Meter is connected in the grid connection point (The backflow power setting is not applicable).

Current sensor: Solis Smart Sensor is connected in the grid connection poin.

NOTE:

For option 5 (Current sensor), there are several sub-settings available when "Current sensor" is selected.

- **CT Sampling Ratio**

This setting is used to define the CT sampling ratio if customer didn't use the default CT supplied by Solis.

The default CT is 100A:33.33mA (Default ratio is 3000:1)

-> CT Sampling Ratio	YES=<ENT> NO=<ESC> Ratio:3000:1

- **CT Link Test**

This setting is used to check the direction of the CT (Not complusory)

The result is only valid if the following conditions are met.

1. Load power is over 500W.
2. Inverter is set as "Grid OFF" in the LCD.
3. CT is connected to the inverter CT port and the CT is placed at the grid side.

CT Link State Correct

NOTE:

There are 3 states in the CT Link Test

"Error" means the CT is installed in the wrong direction, please change it.

"Can not judge" means the load power is too small and the result is not credible.

"Correct" means the CT is installed correctly.

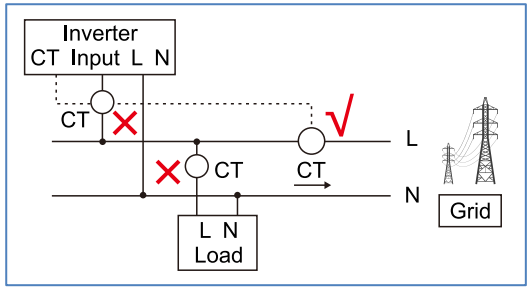

6.5.12.2 Backflow Power

The setting is used to define the allowed export power into the grid.

```
->Set Backflow Power
```

```
YES=<ENT>  NO=<ESC>
Power:-00000W
```

Figure 6.23 Set the backflow power

NOTE:
Positive values indicate the amount of power is allowed to export to the grid. Negative values indicate a more strict control to limit the export power in advance thus ensuring exact no power is feeding into the grid.

6.5.12.3 Fail safe ON/OFF

This setting is used to give out an alarm (stop inverter generation as well) when the CT/Meter connection is lost during operation.
It can prevent potential backflow power into the grid when the system loses control.

```
YES=<ENT>  NO=<ESC>
Fail  Safe Set:ON
```

Figure 6.24 Set the Fail Safe ON/OFF

It is only mandatory to turn on this function when the inverter is installed in UK due to the G100 regulation. For other regions,customers can enable or disable the function as they desire.

NOTE:
When the failsafe function is ON and CT/Meter is disconnected somehow, the inverter will stop generation and give "Failsafe" alarm on the LCD.
When the failsafe function is OFF and CT/Meter is disconnected somehow, the inverter will keep the output power as the last moment when the CT/Meter is still connected. After a restart, the inverter will output at full power without limit.

6. Operation

6.5.12.4 Meter Select

The setting is used to define the correct meter that is connected to the inverter.

```
->1PH Meter
  3PH Meter
```

```
->DDSD1352-C
  ACR10RD16TE
```

Figure 6.25 Meter Select

For Solis single phase inverters, please select "1PH Meter" and then select the corresponding meter model.

6.5.13 External EPM Set

This setting should only be turned on when Solis external EPM device is used.
Two options are available：5G-EPM and Others-EPM.

```
->5G-EPM
  Others-EPM
```

Figure 6.26

5G-EPM Failsafe Option should be turned ON when 5G series EPM device is used
Others-EPM Failsafe Option should be turned ON when 2G series EPM device is used
Only one option can be activated each time.

6.5.14 Restart HMI

The function is used for restart the HMI.

This function is applicable by maintenance personnel only, wrong operation will prevent the inverter from reaching maximum power.

6.5.15 Debug Parameter

This function is used for manufacturer maintenance personnel only.

6.5.16 DSP Update

The function is used for update the DSP.

This function is applicable by maintenance personnel only, wrong operation will prevent the inverter from reaching maximum power.

6.5.17 Power Parameter

This function is used for calibrate inverter output energy. It will not impact the energy count for inverter with RGM.
The screen shows:

```
YES=<ENT> NO=<ESC>
Power para: 1. 000
```

Figure 6.27 Power Rate Limit

Press the Down key to move the cursor.
Press the Up key to change the digit.
Please press the Enter to save the setting and press the ESC key to return to the previous menu.

This setting is used for grid operator, don't change setting under this manual.

6.6 AFCI function

Solis inverters have the built-in AFCI function which can detect the arc fault on the DC circuit and shut down the inverter to prevent a fire disaster.

6.6.1 Enable the AFCI function

The AFCI function can be enabled in the following.
Path:
Advanced Setting -> Password: 0010 ->Special Settings -> AFCI Set -> AFCI ON/OFF -> ON

```
→ AFCI ON/OFF
  AFCI Level
```

```
→ ON
  OFF
```

Figure 6.28 Set AFCI

6. Operation

Warning:
The "AFCI Level" is reserved for Solis technicians ONLY. Do not change the sensitivity otherwise it will lead to frequent false alarms or malfunctions. Solis is not responsible for any further damages caused by unauthorized modifications.

NOTE:
The setting corresponds to the current status as well which can be used to inspect the ON/OFF state of the AFCI function.

6.6.2 Arc Fault

During the normal operation, if an DC arc is detected, the inverter will shut down and give out the following alarm:

```
ARC-FAULT
Restart Press ESC 3s
```

Figure 6.29 Arc Fault

Installer needs to thoroughly inspect the DC circuit to ensure all the cables are correctly fastened.
Once the DC circuit issue has been fixed or it is confirmed to be OK, press “ESC” for 3s and wait for the inverter to restart.

7. Maintenance

Solis Single Phase S5 Inverter does not require any regular maintenance.
However, cleaning the dust on heat-sink will help the inverter to dissipate the heat and increase its life time. The dust can be removed with a soft brush.

CAUTION:
Do not touch the inverter's surface when it is operating. Some parts of the inverter may be hot and cause burns. Turn off the inverter (refer to Section 5.2) and wait for a cool-down period before any maintenance or cleaning operation.

The LCD and the LED status indicator lights can be cleaned with a damp cloth if they are too dirty to be read.

NOTE:
Never use any solvents, abrasives or corrosive materials to clean the inverter.

8. Troubleshooting

The inverter is designed in accordance with the most important international grid-tied standards and safety and electromagnetic compatibility requirements. Before delivering to the customer, the inverter has been subjected to several tests to ensure its optimal operation and reliability.

In case of failure, the LCD screen will display an alarm message. In this case, the inverter may stop feeding into the grid. The failure descriptions and their corresponding alarm messages are listed in Table 8.1:

8. Troubleshooting

Alarm Message	Failure description	Solution
No power	Inverter no power on LCD	1.Check PV input connections 2.Check DC input voltage (single phase >120V, three phase >350V) 3.Check if PV+/– is reversed
LCD show initializing all the time	can not start-up	1.Check if the connector on main board or power board are fixed. 2.Check if the DSP connector to power board are fixed.
OV-G-V01/02/03/04	Over grid voltage	1.Resistant of AC cable is too high. Change bigger size grid cable 2.Adjust the protection limit if it's allowed by electrical company.
UN-G-V01/02	Under grid voltage	1.Use user define function to adjust the protection limit if it's allowed by electrical company.
OV-G-F01/02	Over grid frequency	
UN-G-F01/02	Under grid frequency	
Reverse-GRID	Wrong AC polarity	1. Check the polarity of AC connector.
Reverse-DC	Reverse DC polarity	1. Check the polarity of DC connector.
NO-GRID	No grid voltage	1.Check connections and grid switch. 2.Check the grid voltage inside inverter terminal.
OV-DC01/02/03/04	Over DC voltage	1.Reduce the module number in series
OV-BUS	Over DC bus voltage	1.Check inverter inductor connection 2.Check driver connection
UN-BUS01/02	Under DC bus voltage	
GRID-INTF01/02	Grid interference	1.Restart inverter 2.Change power board
OV-G-I	Over grid current	
IGBT-OV-I	Over IGBT current	
DC-INTF OV-DCA-I	DC input overcurrent	1.Restart inverter 2.Identify and remove the string to the fault MPPT 2.Change power board
IGFOL-F	Grid current tracking fail	1.Restart inverter or contact installer.
IG-AD	Grid current sampling fail	
OV-TEM	Over Temperature	1.Check inverter surrounding ventilation. 2.Check if there's sunshine direct on inverter in hot weather.
INI-FAULT	Initialization system fault	1.Restart inverter or contact installer.
DSP-B-FAULT	Comm. failure between main and slave DSP	
12Power-FAULT	12V power supply fault	
PV ISO-PRO 01/02	PV isolation protection	1.Remove all DC input, reconnect and restart inverter one by one. 2.Identify which string cause the fault and check the isolation of the string.

8. Troubleshooting

Alarm Message	Failure description	Solution
ILeak-PRO 01/02/03/04	Leakage current protection	1.Check AC and DC connection 2.Check inverter inside cable connection.
RelayChk-FAIL	Relay check fail	1.Restart inverter or contact installer.
DCinj-FAULT	High DC injection current	1.Restart inverter or contact installer.
Screen OFF with DC applied	Inverter internally damaged	1.Do not turn off the DC switches as it will damage the inverter. 2.Please wait for the solar irradiance reduces and confirm the string current is less than 0.5A with a clip-on ammeter and then turn off the DC switches. 3.Please note that any damages due to wrong operations are not covered in the device warranty.

Table 8.1 Fault message and description

NOTE:
If the inverter displays any alarm message as listed in Table 8.1; please turn off the inverter (refer to Section 5.2 to stop your inverter) and wait for 5 minutes before restarting it (refer to Section 5.1 to start your inverter). If the failure persists, please contact your local distributor or the service center. Please keep ready with you the following information before contacting us.

1. Serial number of Solis Single Phase Inverter;
2. The distributor/dealer of Solis Single Phase Inverter (if available);
3. Installation date.
4. The description of problem (i.e. the alarm message displayed on the LCD and the status of the LED status indicator lights. Other readings obtained from the Information submenu (refer to Section 6.2) will also be helpful.);
5. The PV array configuration (e.g. number of panels, capacity of panels, number of strings , etc.);
6. Your contact details.

9. Specifications

Model	S5-GR1P2.5K
Max. DC input voltage (Volts)	550
Rated DC voltage (Volts)	250
Startup voltage (Volts)	60
MPPT voltage range (Volts)	50...450
Max. input current (Amps)	12.5+12.5
Max short circuit input current (Amps)	17.2+17.2
MPPT number/Max input strings number	2/2
Rated output power (Watts)	2500
Max. output power (Watts)	2800
Max. apparent output power (VA)	2800
Rated grid voltage (Volts)	1/N/PE, 220/230
Rated output current (Amps)	11.4/10.9
Max. output current (Amps)	13.3
Power Factor (at rated output power)	>0.99 (0.8 leading - 0.8 lagging)
THDi (at rated output power)	<3%
Rated grid frequency (Hertz)	50/60
Operating frequency range (Hertz)	45...55 or 55...65
Max.efficiency	97.8%
EU efficiency	97.1%
Dimensions	310W*543H*160D (mm)
Weight	11.5kg
Topology	Transformerless
Self consumption (night)	< 1 W
Operating ambient temperature range	-25℃. . . +60℃
Relative humidity	0~100%
Ingress protection	IP65
Noise emission (typical)	<20 dBA
Cooling concept	Natural convection
Max.operation altitude	4000m
Grid connection standard	VDE-AR-N 4105 / VDE V 0124, EN 50549-1, VDE 0126 / UTE C 15 / VFR:2019, G98 or G99, RD 1699 / RD 244 / UNE 206006 / UNE 206007-1, CEI 0-21, C10/11, NRS 097-2-1, TOR, EIFS 2018.2, IEC 62116, IEC 61727, IEC 60068, IEC 61683, EN 50530, MEA, PEA
Safety/EMC standard	IEC/EN 62109-1/-2, IEC/EN 61000-6-2/-3
DC connection	MC4 connector
AC connection	Quick connection plug
Display	LCD, 2×20 Z.
Communication connections	RS485, Optional: Wi-Fi, GPRS
Warranty Terms	5 Years (Extend to 20 Years)

9. Specifications

Model	S5-GR1P3K
Max. DC input voltage (Volts)	600
Rated DC voltage (Volts)	330
Startup voltage (Volts)	120
MPPT voltage range (Volts)	90...520
Max. input current (Amps)	12.5+12.5
Max short circuit input current (Amps)	17.2+17.2
MPPT number/Max input strings number	2/2
Rated output power (Watts)	3000
Max. output power (Watts)	3300
Max. apparent output power (VA)	3300
Rated grid voltage (Volts)	1/N/PE, 220/230
Rated output current (Amps)	13.6/13
Max. output current (Amps)	15.7
Power Factor (at rated output power)	>0.99 (0.8 leading - 0.8 lagging)
THDi (at rated output power)	<3%
Rated grid frequency (Hertz)	50/60
Operating frequency range (Hertz)	45...55 or 55...65
Max.efficiency	97.8%
EU efficiency	97.1%
Dimensions	310W*543H*160D (mm)
Weight	11.5kg
Topology	Transformerless
Self consumption (night)	< 1 W
Operating ambient temperature range	-25℃. . . +60℃
Relative humidity	0~100%
Ingress protection	IP65
Noise emission (typical)	<20 dBA
Cooling concept	Natural convection
Max.operation altitude	4000m
Grid connection standard	VDE-AR-N 4105 / VDE V 0124, EN 50549-1, VDE 0126 / UTE C 15 / VFR:2019, G98 or G99, RD 1699 / RD 244 / UNE 206006 / UNE 206007-1, CEI 0-21, C10/11, NRS 097-2-1, TOR, EIFS 2018.2, IEC 62116, IEC 61727, IEC 60068, IEC 61683, EN 50530, MEA, PEA
Safety/EMC standard	IEC/EN 62109-1/-2, IEC/EN 61000-6-2/-3
DC connection	MC4 connector
AC connection	Quick connection plug
Display	LCD, 2×20 Z.
Communication connections	RS485, Optional: Wi-Fi, GPRS
Warranty Terms	5 Years (Extend to 20 Years)

9. Specifications

Model	S5-GR1P3.6K
Max. DC input voltage (Volts)	600
Rated DC voltage (Volts)	330
Startup voltage (Volts)	120
MPPT voltage range (Volts)	90...520
Max. input current (Amps)	12.5+12.5
Max short circuit input current (Amps)	17.2+17.2
MPPT number/Max input strings number	2/2
Rated output power (Watts)	3600
Max. output power (Watts)	4000
Max. apparent output power (VA)	4000
Rated grid voltage (Volts)	1/N/PE, 220/230
Rated output current (Amps)	16.0/15.7
Max. output current (Amps)	16.0
Power Factor (at rated output power)	>0.99 (0.8 leading - 0.8 lagging)
THDi (at rated output power)	<3%
Rated grid frequency (Hertz)	50/60
Operating frequency range (Hertz)	45...55 or 55...65
Max.efficiency	97.8%
EU efficiency	97.1%
Dimensions	310W*543H*160D (mm)
Weight	11.5kg
Topology	Transformerless
Self consumption (night)	< 1 W
Operating ambient temperature range	-25℃. . . +60℃
Relative humidity	0~100%
Ingress protection	IP65
Noise emission (typical)	<20 dBA
Cooling concept	Natural convection
Max.operation altitude	4000m
Grid connection standard	VDE-AR-N 4105 / VDE V 0124, EN 50549-1, VDE 0126 / UTE C 15 / VFR:2019, G98 or G99, RD 1699 / RD 244 / UNE 206006 / UNE 206007-1, CEI 0-21, C10/11, NRS 097-2-1, TOR, EIFS 2018.2, IEC 62116, IEC 61727, IEC 60068, IEC 61683, EN 50530, MEA, PEA
Safety/EMC standard	IEC/EN 62109-1/-2, IEC/EN 61000-6-2/-3
DC connection	MC4 connector
AC connection	Quick connection plug
Display	LCD, 2×20 Z.
Communication connections	RS485, Optional: Wi-Fi, GPRS
Warranty Terms	5 Years (Extend to 20 Years)

9. Specifications

Model	S5-GR1P4K
Max. DC input voltage (Volts)	600
Rated DC voltage (Volts)	330
Startup voltage (Volts)	120
MPPT voltage range (Volts)	90...520
Max. input current (Amps)	12.5+12.5
Max short circuit input current (Amps)	17.2+17.2
MPPT number/Max input strings number	2/2
Rated output power (Watts)	4000
Max. output power (Watts)	4400
Max. apparent output power (VA)	4400
Rated grid voltage (Volts)	1/N/PE, 220/230
Rated output current (Amps)	18.2/17.4
Max. output current (Amps)	21
Power Factor (at rated output power)	>0.99 (0.8 leading - 0.8 lagging)
THDi (at rated output power)	<3%
Rated grid frequency (Hertz)	50/60
Operating frequency range (Hertz)	45...55 or 55...65
Max.efficiency	98.1%
EU efficiency	97.3%
Dimensions	310W*543H*160D (mm)
Weight	11.5kg
Topology	Transformerless
Self consumption (night)	< 1 W
Operating ambient temperature range	-25℃. . . +60℃
Relative humidity	0~100%
Ingress protection	IP65
Noise emission (typical)	<20 dBA
Cooling concept	Natural convection
Max.operation altitude	4000m
Grid connection standard	VDE-AR-N 4105 / VDE V 0124, EN 50549-1, VDE 0126 / UTE C 15 / VFR:2019, G98 or G99, RD 1699 / RD 244 / UNE 206006 / UNE 206007-1, CEI 0-21, C10/11, NRS 097-2-1, TOR, EIFS 2018.2, IEC 62116, IEC 61727, IEC 60068, IEC 61683, EN 50530, MEA, PEA
Safety/EMC standard	IEC/EN 62109-1/-2, IEC/EN 61000-6-2/-3
DC connection	MC4 connector
AC connection	Quick connection plug
Display	LCD, 2×20 Z.
Communication connections	RS485, Optional: Wi-Fi, GPRS
Warranty Terms	5 Years (Extend to 20 Years)

9. Specifications

Model	S5-GR1P4.6K
Max. DC input voltage (Volts)	600
Rated DC voltage (Volts)	330
Startup voltage (Volts)	120
MPPT voltage range (Volts)	90...520
Max. input current (Amps)	12.5+12.5
Max short circuit input current (Amps)	17.2+17.2
MPPT number/Max input strings number	2/2
Rated output power (Watts)	4600
Max. output power (Watts)	5000
Max. apparent output power (VA)	5000
Rated grid voltage (Volts)	1/N/PE, 220/230
Rated output current (Amps)	20.9/20
Max. output current (Amps)	23.8
Power Factor (at rated output power)	>0.99 (0.8 leading - 0.8 lagging)
THDi (at rated output power)	<3%
Rated grid frequency (Hertz)	50/60
Operating frequency range (Hertz)	45...55 or 55...65
Max.efficiency	98.1%
EU efficiency	97.3%
Dimensions	310W*543H*160D (mm)
Weight	11.5kg
Topology	Transformerless
Self consumption (night)	< 1 W
Operating ambient temperature range	-25℃. . . +60℃
Relative humidity	0~100%
Ingress protection	IP65
Noise emission (typical)	<20 dBA
Cooling concept	Natural convection
Max.operation altitude	4000m
Grid connection standard	VDE-AR-N 4105 / VDE V 0124, EN 50549-1, VDE 0126 / UTE C 15 / VFR:2019, G98 or G99, RD 1699 / RD 244 / UNE 206006 / UNE 206007-1, CEI 0-21, C10/11, NRS 097-2-1, TOR, EIFS 2018.2, IEC 62116, IEC 61727, IEC 60068, IEC 61683, EN 50530, MEA, PEA
Safety/EMC standard	IEC/EN 62109-1/-2, IEC/EN 61000-6-2/-3
DC connection	MC4 connector
AC connection	Quick connection plug
Display	LCD, 2×20 Z.
Communication connections	RS485, Optional: Wi-Fi, GPRS
Warranty Terms	5 Years (Extend to 20 Years)

Model	S5-GR1P5K
Max. DC input voltage (Volts)	600
Rated DC voltage (Volts)	330
Startup voltage (Volts)	120
MPPT voltage range (Volts)	90...520
Max. input current (Amps)	12.5+12.5
Max short circuit input current (Amps)	17.2+17.2
MPPT number/Max input strings number	2/2
Rated output power (Watts)	5000
Max. output power (Watts)	5000
Max. apparent output power (VA)	5000
Rated grid voltage (Volts)	1/N/PE, 220/230
Rated output current (Amps)	22.7/21.7
Max. output current (Amps)	25
Power Factor (at rated output power)	>0.99 (0.8 leading - 0.8 lagging)
THDi (at rated output power)	<3%
Rated grid frequency (Hertz)	50/60
Operating frequency range (Hertz)	45...55 or 55...65
Max.efficiency	98.1%
EU efficiency	97.3%
Dimensions	310W*543H*160D (mm)
Weight	11.5kg
Topology	Transformerless
Self consumption (night)	< 1 W
Operating ambient temperature range	-25℃. . . +60℃
Relative humidity	0~100%
Ingress protection	IP65
Noise emission (typical)	<20 dBA
Cooling concept	Natural convection
Max.operation altitude	4000m
Grid connection standard	VDE-AR-N 4105 / VDE V 0124, EN 50549-1, VDE 0126 / UTE C 15 / VFR:2019, G98 or G99, RD 1699 / RD 244 / UNE 206006 / UNE 206007-1, CEI 0-21, C10/11, NRS 097-2-1, TOR, EIFS 2018.2, IEC 62116, IEC 61727, IEC 60068, IEC 61683, EN 50530, MEA, PEA
Safety/EMC standard	IEC/EN 62109-1/-2, IEC/EN 61000-6-2/-3
DC connection	MC4 connector
AC connection	Quick connection plug
Display	LCD, 2×20 Z.
Communication connections	RS485, Optional: Wi-Fi, GPRS
Warranty Terms	5 Years (Extend to 20 Years)

9. Specifications

Model	S5-GR1P6K
Max. DC input voltage (Volts)	600
Rated DC voltage (Volts)	330
Startup voltage (Volts)	120
MPPT voltage range (Volts)	90...520
Max. input current (Amps)	12.5+12.5
Max short circuit input current (Amps)	17.2+17.2
MPPT number/Max input strings number	2/2
Rated output power (Watts)	6000
Max. output power (Watts)	6000
Max. apparent output power (VA)	6000
Rated grid voltage (Volts)	1/N/PE, 220/230
Rated output current (Amps)	27.3
Max. output current (Amps)	27.3
Power Factor (at rated output power)	>0.99 (0.8 leading - 0.8 lagging)
THDi (at rated output power)	<3%
Rated grid frequency (Hertz)	50/60
Operating frequency range (Hertz)	45...55 or 55...65
Max.efficiency	98.1%
EU efficiency	97.3%
Dimensions	310W*543H*160D (mm)
Weight	11.5kg
Topology	Transformerless
Self consumption (night)	< 1 W
Operating ambient temperature range	-25℃. . . +60℃
Relative humidity	0~100%
Ingress protection	IP65
Noise emission (typical)	<20 dBA
Cooling concept	Natural convection
Max.operation altitude	4000m
Grid connection standard	VDE-AR-N 4105 / VDE V 0124, EN 50549-1, VDE 0126 / UTE C 15 / VFR:2019, G98 or G99, RD 1699 / RD 244 / UNE 206006 / UNE 206007-1, CEI 0-21, C10/11, NRS 097-2-1, TOR, EIFS 2018.2, IEC 62116, IEC 61727, IEC 60068, IEC 61683, EN 50530, MEA, PEA
Safety/EMC standard	IEC/EN 62109-1/-2, IEC/EN 61000-6-2/-3
DC connection	MC4 connector
AC connection	Quick connection plug
Display	LCD, 2×20 Z.
Communication connections	RS485, Optional: Wi-Fi, GPRS
Warranty Terms	5 Years (Extend to 20 Years)